REVISION	ECO	APPD	DATE
1	0561	WAS PCO1	27-11-84

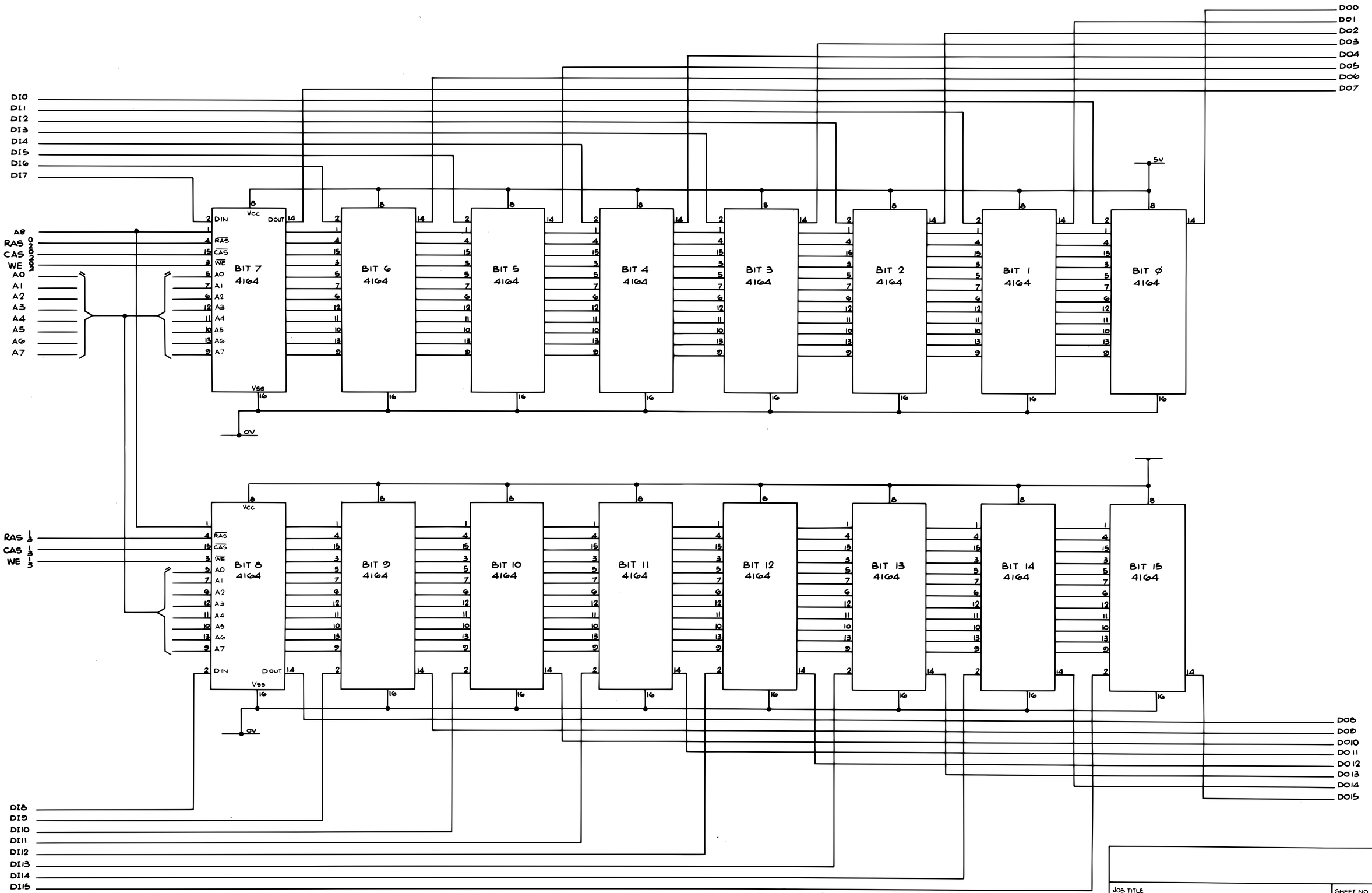

NOTE :- 2 BANKS OF 128K RAM SHOWN PER BOARD.

JOB TITLE: APRICOT COMPUTER			SHEET NO.: 3 OF 4
DRG. TITLE: APRICOT 128K RAM SECTION		DRG. NO.: 110372-CD	REV.: G
	DRAWN: CASMU	DATE: 5·6·84	

DRG N°.

ACT PC Ø2

REVISION	ECO. NO.	APPROVED	DATE

+5v

C3 1µ0F 25v

47µF 10v C2

Vcc Vss

IC 1 DP8409

IC's 11-26 4164-20

IC11 IC12 IC13 IC14 IC15 IC16 IC17 IC18

IC19 IC20 IC21 IC22 IC23 IC24 IC25 IC26

IC 4 74LS375

IC5 74LS244

IC7 74S10

IC7 74S86

IC2 DP84300

IC3 DP84332

IC6 74LS74A

IC9 74LS373

IC8 74LS373

TP1 TP2 TP3 TP4

P2 P3

R1 10R

R2 3K3

R3 3K3

R4 3K3

R5 10R

R6 3K3

BS-L

ALE

WIN

RGCK

RFCK

RFSH (M2)

MØ

CAS

RASIN

CASL

CASU

RFRQ

MA Ø–MA 8

RAS Ø

RAS 1

RF10

M1

WE

RAS

NC

a 8 b 8 a 7 b 7 a 6 b14 a13 b13 a26 b26 b 25 a 25 a 5 b 5 b 4 a 4

b 3 a 3 b 2 a15 b24 b18 a17 a24 b6 a2 a,b 31 a,b 19

D15 D14 D13 D12 D11 D10 D9 D8 D7 D6 D5 D4 D3 D2 D1 DØ

b9 a9 b10 a10 b11 a11 b12 a12 a 27 b 27 a 28 b 28 a 29 b 29 a 30 b 30

C1 47µF 10v C4-C26 0µ0·1F

SPARE GATES

IC4 74LS375

IC6 74LS74

74S86

IC5 74LS244 BS-L

I C	PART	PACK	Vcc +5v	Vss 0v
1	DP8409N	48 x 0·6	36	13&38
2	DP84300	24 x 0·3	24	12
3	DP84332	20 x 0·3	20	10
4	74LS375	16 x 0·3	16	8
5	74LS244	20 x 0·3	20	10
6	74LS74	14 x 0·3	14	7
7	74S10	14 x 0·3	14	7
7'	74S86	14 x 0·3	14	7
8	74LS373	20 x 0·3	20	10
9	74LS373	20 x 0·3	20	10
11 - 26	4164 - 20	16 x 0·3	8	16

DO NOT SCALE

UNLESS OTHERWISE SPECIFIED
DIMENSIONS ARE IN MILLIMETRES
X 0.X 0.XX 0.XXX
±0.5 ±0.1 ±0.05 ±0.010
MACH. ANGLE ±0.5°
CAST & FAB. ANGLE ±2°
ALL MACH. SURFACES N
REMOVE ALL BURRS & SHARP EDGES
DRGS. TO BE IN ACCORDANCE WITH BS 308

MATERIAL: ——

FINISH: ——

ACT (advanced technology) LTD
2, CASTLE HILL, DUDLEY, WEST MIDLANDS, DY1 4PS

This drawing and the design hereon are the exclusive property of A.C.T. The drawing shall not be copied nor its contents communicated or reproduced in any form and for any purpose without the prior specific authority in writing of A.C.T.

PROJECTION

SCALE N.T.S.

DRAWN CEH/CC

APPROVED

DATE 12-83

TITLE: 128/512 kb EXPANSION BOARD (8409 VERSION)

DRG NO. ACT PC Ø2

SHT. 1 OF SHTS. 1

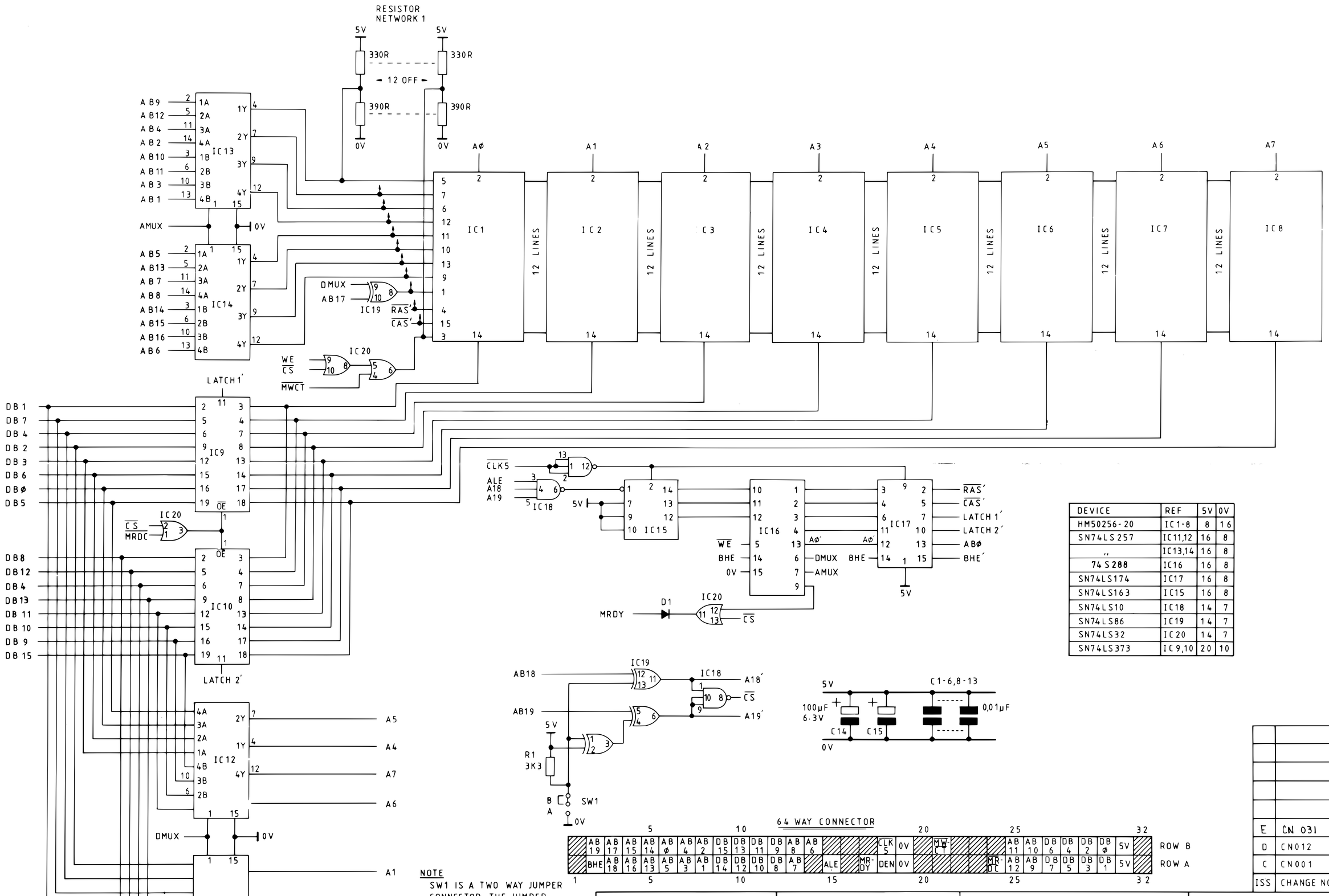

DEVICE	REF	5V	0V
HM50256-20	IC1-8	8	16
SN74LS257	IC11,12	16	8
,,	IC13,14	16	8
74S288	IC16	16	8
SN74LS174	IC17	16	8
SN74LS163	IC15	16	8
SN74LS10	IC18	14	7
SN74LS86	IC19	14	7
SN74LS32	IC20	14	7
SN74LS373	IC9,10	20	10

NOTE
SW1 IS A TWO WAY JUMPER CONNECTOR. THE JUMPER CONNECTS 'B' FOR THE FIRST 256K CARD FITTED AND CONNECTS 'A' WHEN TWO CARDS ARE FITTED.

ISS	CHANGE NOTE NO.	BY	DATE
E	CN 031	MG	14-3
D	CN012	MG	15-2
C	CN001	MG	6-2

CLIENT ACT
PROJECT APRICOT
TITLE
APRICOT DRAM CARD (256K)

DRAWING NO. E015 (BOB001)

DRAWN M.H. Griffiths
CHECKED J.F. Saunders

REVISION	ECO	APPD	DATE
1	05601	MAS PC01	27-11-84

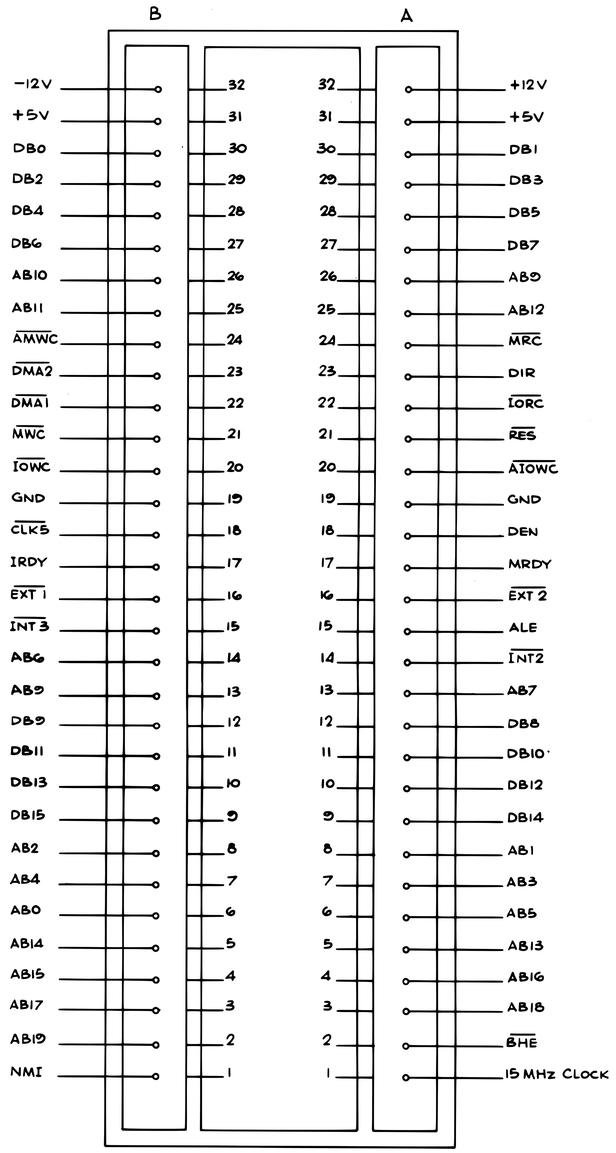

EXPANSION 1.

NOTE :- MAXIMUM SIGNAL LOADING IS
2 LS TTL GATES PER SLOT.

3 EXPANSION SLOTS PER BOARD.

JOB TITLE: APRICOT COMPUTER			SHEET NO.: 4 OF 4
DRG.TITLE: APRICOT EXPANSION SLOT		DRG. NO.: 110372-CD	REV.: G
	DRAWN: CASMU	DATE: 5·6·84	

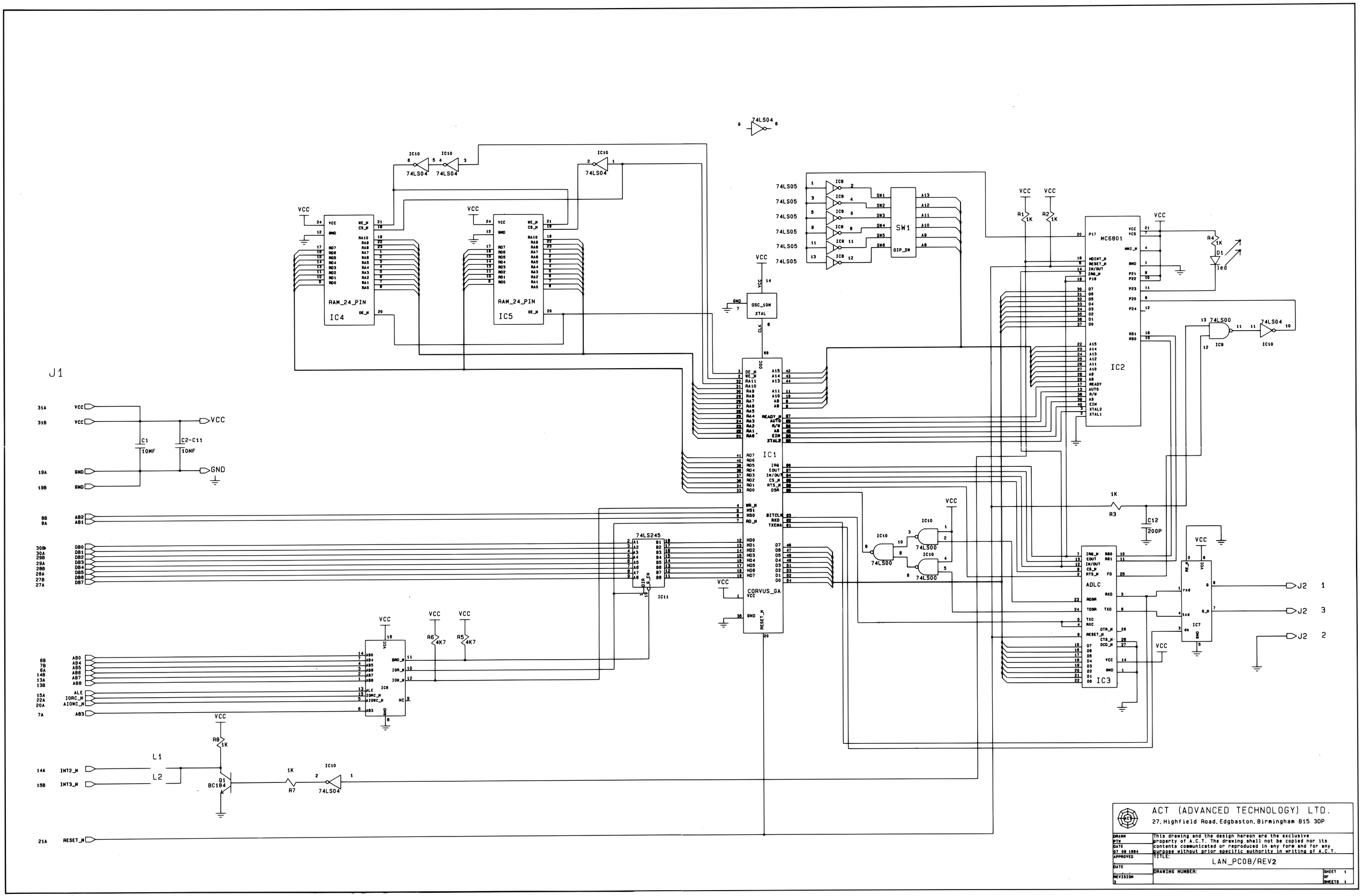

ACT (ADVANCED TECHNOLOGY) LTD.
27, Highfield Road, Edgbaston, Birmingham B15 3DP

DRAWN PTW	This drawing and the design hereon are the exclusive property of A.C.T. The drawing shall not be copied nor its contents communicated or reproduced in any form and for any purpose without prior specific authority in writing of A.C.T.
DATE 07 08 1984	
APPROVED	TITLE: LAN_PC08/REV2
DATE	DRAWING NUMBER:
REVISION 3	SHEET 1 OF SHEETS 1

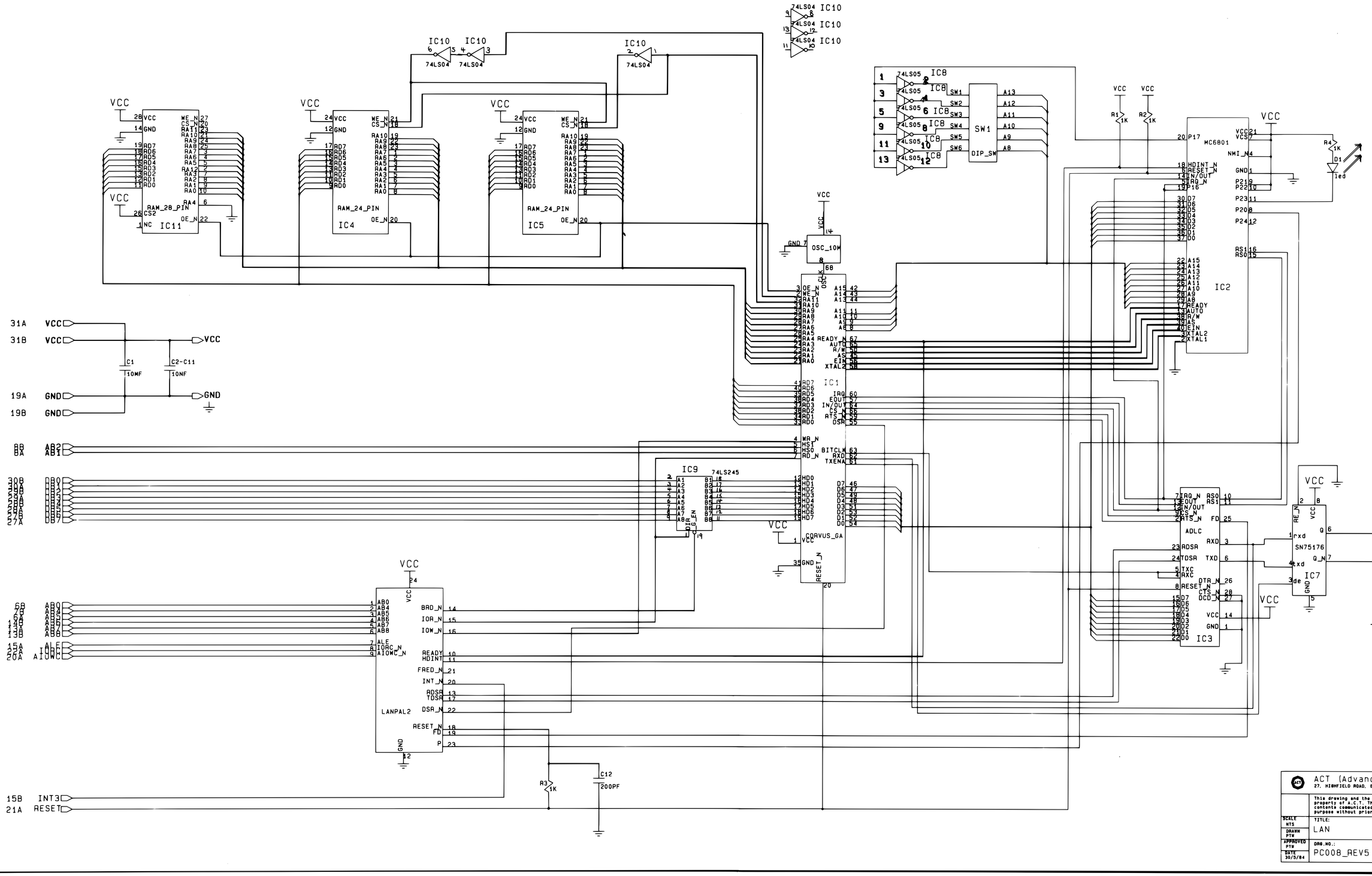

ACT (Advanced Technology) LTD
27, HIGHFIELD ROAD, EDGBASTON, BIRMINGHAM, B15 3DP

This drawing and the design hereon are the exclusive property of A.C.T. The drawing shall not be copied nor its contents communicated or reproduced in any form and for any purpose without prior specific authority in writing of A.C.T.

SCALE NTS	TITLE: LAN
DRAWN PTW	
APPROVED PTW	DRG.NO.: PC008_REV5
DATE 30/5/84	SHT 1 OF SHTS 1

REVISION	ECO	APPD	DATE
1	0561	WAS PCO1	27-11-84

DIR
RDY2
CSS
DB0
DB1
DB2
DB3
DB4
DB5
DB6
DB7
DB8
DB9
DB10
DB11
DB12
DB13
DB14
DB15
PB0
PB1
PB2
PB3
PB4
PB5
PB6
PB7
R/W
E
A1
CSF
RESCRT
AB1
AB2
AB3
AB4
AB5
AB6
AB7
AB8
AB9
AB10
AB11
AB12
AB13
AB14
AB15
AB16
AB17
AB18
AB19
A0
BHE
MMSEL
RDY1
CLK15
A/G
LOE
LEC
LES
DON
CONNECTOR A
9 PIN D TYPE
+5V
+12M
OVM
FGND
GND
VIDEO
HORSYNC
VERTSYNC
TO EXPANSION CONNECTOR - PIN 1A
3 PIN MOLEX 0·1" PITCH
EXPANSION CONNECTOR
PSU CONNECTOR
SPARE

I.C NO	REF.	QTY	DEVICE	Vcc	GND
9.21.34	B15. E14. C12.	3	SN74LS112N	16	8
10.27.33.	C15. E13. B12.	5	SN74LS02N	14	7
12.	G18.	1	SN74S74N	14	7
13.19.	H15. B14.	2	SN74LS00N	14	7
20.	C14.	1	SN74LS27N	14	7
22.	G14.	1	SN74S10N	14	7
23.	H14.	1	SN74S86N	14	7
24.	J14.	1	SN74LS174N	16	8
25.44.45.46	B13. C11. E11. F11.	4	SN74S00N	14	7
26.	C13	1	SN74LS163AN	16	8
28.41.	G13. P12.	2	SN74LS10N	14	7
29.	J13.	1	SN74LS377N	20	10
30.	M13.	1	MC6845	20	1
35.36.	E12. G12.	2	SN74S112N	16	8
37.	J12.	1	SN74LS393N	14	7
38.39.40.43.	K12. M12. O12. B11.	6	SN74LS257AN	16	8
61.63.	K7. K6.				
48.	J11.	1	SN74LS244N	20	10
49.50.	L10. N10.	2	TMM 2016	24	12
55.60.	J9. J7	2	SN74LS374N	20	10
56.57	M9. O9.	2	SN74LS245N	20	10
62.82.	J6. J2.	2	SN74LS373N	20	10
80.87.	J5. J1.	2	SN74LS209N	20	10
11.47.	E15. H11	2	SN74LS04N	14	7
	K2	1	SN74S153	16	8

JOB TITLE: APRICOT COMPUTER
SHEET NO. 2 OF 4
DRG. TITLE: APRICOT MAIN BOARD DRAM STORE & CRTC LOGIC
DRG. NO. 110372-CD
REV. G
DRAWN CASMU
DATE 5·6·84

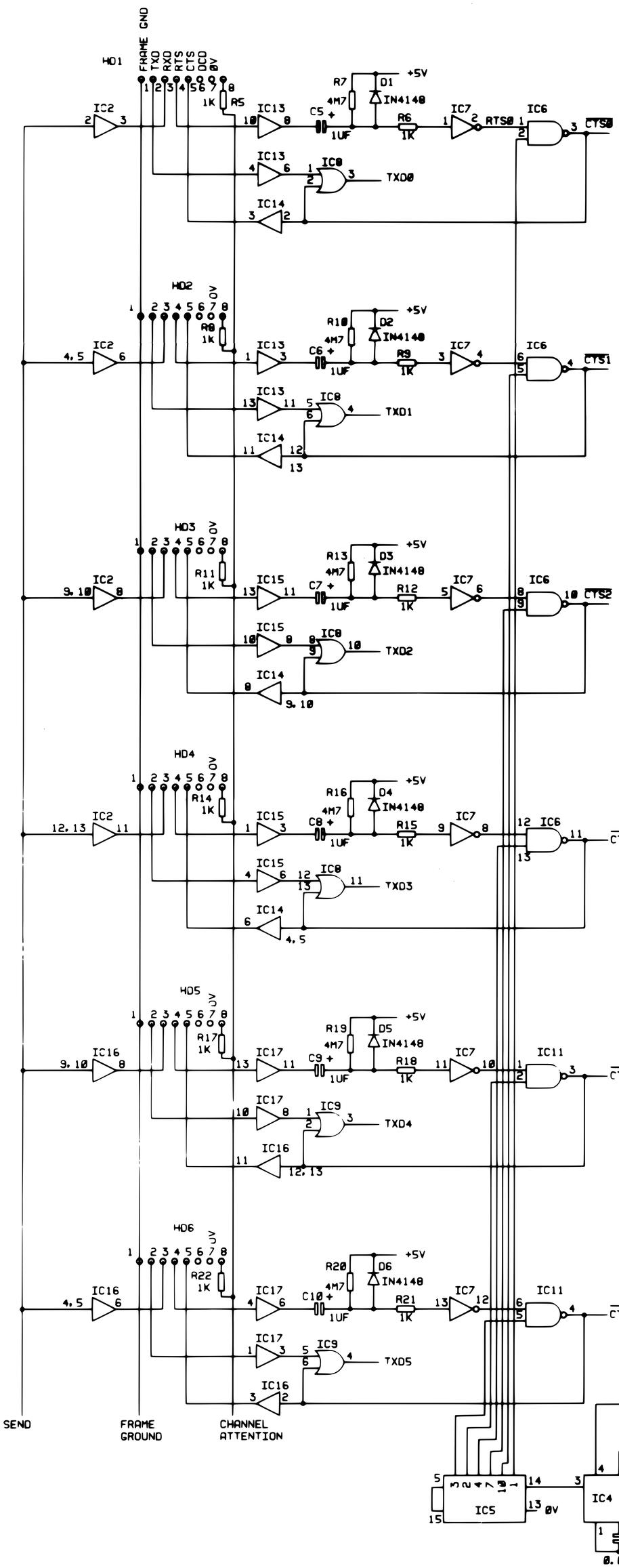

+12V	-12V	0V	5V	DEVICE	REFERENCE
14	1	7	-	1488	IC2, 12, 14, 16
-	-	7	14	1489	IC1, 13, 15, 17
-	-	8	16	4017	IC5
-	-	1	8	555	IC4
-	-	7	14	40118	IC6, 11
-	-	7	14	40738	IC3, 10
-	-	7	14	40718	IC8, 9
-	-	7	14	40106	IC7

D	CN124
C	CN121
B	CN092
A	CN085
ISSUE	CHANGE NOTE

POINT '7' CIRCUIT DIAGRAM
DRAWING NO. E044
SECTOR TECHNOLOGY 1384

DRG. NO.: 111236-CD

REVISION	ECO. NO.	APPROVED	DATE
1			13/9/84

PL1

RES A21 · AB1 A8 · AB2 B8 · AB3 A7 · AB0 B6 · AB4 B7 · AB5 A6 · AB6 B14 · AB7 A13 · AB8 B13 · ALE A15 · DEN A18 · IOWC B20 · IRDY B17 · INT2 A14 · IORC A22 · CLK5 B18 · DB7 A27 · DB6 B27 · DB5 A28 · DB4 B28 · DB3 A29 · DB2 B29 · DB1 A30 · DB0 B30 · +5V A31, B31 · 0V A19, B19

IC3 (PAL) 20L10 — INTRQ, AB0, AB4, AB5, AB6, AB7, AB8, ALE, DEN, IOWC, RDY, INT2, IORC, LATCHCK, WCCS, BCS, RE, WE, RAMCS, BYTE CLOCK, DATAEN

IC13 74LS240 — RAMCS

IC8 74LS393 — 2A, 2CLR, 2QC, 2QD, 2QB, 2QA

IC5 74LS245 — DIR, G, DB7–DB0, D7–D0

C1 50µF 10V. · C11-20 0·01µF

IC6 74LS259 — CLR, A, B, C, EN, D, Q7, Q6, Q5, Q4, Q3, Q2, Q1, Q0, D0

CLKSEL · XFERD · HBCR · HS2 · HS1 · HS0

D BUS

SECTOR CLOCK

IC8 74LS393 — 1CLR, 1QD, 1QC, 1QB, 1QA, 1A

R10 1R * · R9 1R *

* FIT R10 IF IC14 IS 6116

FIT R9 IF IC14 IS 6264

IC10 74S74 — 1D, 1PR, 1CLR, 1CK, 1Q, 1Q̄

RAMA8

IC7 74LS393 — 1CLR, 1QD, 1QC, 1QB, 1QA, 1A

RAMA7

IC7 74LS393 — 2CLR, 2QD, 2QC, 2QB, 2QA

A12, A11, A10, A9, A8, A7, A6, A5, A4, A3, A2, A1, A0

CS1 · CS2 · RAMCS

IC14 STATIC RAM 6264-15 (8K x 8) OR 6116-4 (2K x 8)

BYTE CTR RESET · PU1

IC1 WD1010-05

MR, A0, A1, A2, INTRQ, CS, BCS, RE, WE, D7–D0, BDRQ, WCLK, WDATA, LATE, EARLY, RDATA, DRUN, RCLK, NC, STEP, DIR, WG, INDEX, TK000, SC, READY, WF, RWC, READ GATE, BCR, BRDY

X01 10 MHz XTAL OSC.

RP3 1K. 8-PIN SIL RESISTOR PACK

RP2 10K. 8-PIN SIL RESISTOR PACK

IC10 74S74 — 2D, 2CK, 2PR, 2CLR, 2Q̄

PU2 · DRUN · RDATA · BRDY

IC11 74LS374 — D0–D7, CLK, OE, Q0–Q5

IC13 74LS240

IC15 DELAY LINE 0447-0050-01 — IN, T1–T5

IC11 74LS374 — D6, D7, Q6, Q7

IC4 (PAL2) 14H4 — BRDYIN, BRDYOUT, EARLY, LATE, WBCR, RWC, EDATA, NDATA, LDATA, BDRQ, CLKSEL, XFERD, HBCR, SECTOR CLOCK, SCLK, RAMA8, RAMA7, BCR, WRITE DATA

PU5 · PU4 · MFMRD

IC9 Am26S02 — Cx, Rx, A, B, Q, Q̄, CLR

R1 4K99 1% · RV1 · R8 47K · C9 100pF 1% · C10 560pF

N.B C10 & RV1 ARE NOT NORMALLY FITTED

IC2 DP8460 — READ GATE, VCO, VCO CLOCK, SYNC DATA, LOCK DETECTED, SET PLL LOCK, 0/1̄ PREAMBLE, DELAY DISABLE, 2F-CLOCK, ENCODED DATA, PG1, PG3, IRSET, IBSET, PG2, CPOUT, C1, C2, RVCO

R2 100K · C3 0·1µF · C2 1µF · R3 1K5 · C4 1nF · R4 1K5 · C5 1nF · R5 4K7 · C8 100pF 1% · C7 150pF · R6 200R · C6 6·8nF · R7 1K 1/2%

IC16 75116 — A, EN, B, YS, YP, ZS, ZP

IC16 75116 — YS, YP, EN, NON INV.I/P, RT, INV.I/P, RC

PL2

24	STEP	34	DIR
6	WG	20	INDEX
10	TRACK000	8	SEEK COMPLETE
22	READY	12	WRITE FAULT
2	RWC	1,3,5,7,9,11,13,15,17,19,21,23,25,27,29,31,33,36,38,40,42,45,46,49,50,53,54	
26	DS1	4	HS2
18	HS1	14	HS0
28	DS2	30	DS3
32	DS4	47	+MWD
48	-MWD	51	+MRD
52	-MRD		

RP1 220/330R. 8-PIN SIL RESISTOR PACK

CCT REF	TYPE	PINS	+5V PIN	0V PIN	WIDTH
IC1	WD1010-05	40	40	20	0·6"
IC2	DP8460-4	24	24	12	0·3"
IC3	PAL20L10	24	24	12	0·3"
IC4	PAL14H4	20	20	10	0·3"
IC5	74LS245	20	20	10	0·3"
IC6	74LS259	16	16	8	0·3"
IC7	74LS393	14	14	7	0·3"
IC8	74LS393	14	14	7	0·3"
IC9	Am26S02	16	16	8	0·3"
IC10	74S74	14	14	7	0·3"
IC11	74LS374	20	20	10	0·3"
IC12	74LS240	20	20	10	0·3"
IC13	74LS240	20	20	10	0·3"
IC14	HM6264-15	28	28	14	0·6"
IC15	0047-0050-01	14	14	7	0·3"
IC16	SN75116	16	16	8	0·3"
X01	10MHz XTAL OSC.	14 (ONLY 1,7,8 &14 FITTED)	14	7	0·3"

NOTES
ALL IC's AND X01 DECOUPLED BY 0·01µF(C11-C20)
NC=NO CONNECTION
IC15 NOT NORMALLY FITTED

ACT (advanced technology) LTD
27, HIGHFIELD ROAD, EDGBASTON, BIRMINGHAM

This drawing and the design hereon are the exclusive property of A.C.T. The drawing shall not be copied nor its contents communicated or reproduced in any form and for any purpose without prior specific authority in writing of A.C.T.

THIRD

SCALE 1:1

DRAWN RD

APPROVED

DATE 13-9-84

TITLE: APRICOT PORTABLE WINCHESTER DISK CONTROLLER BOARD

DRG. NO.: 111236-CD

SHT 1 OF SHTS 1